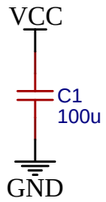

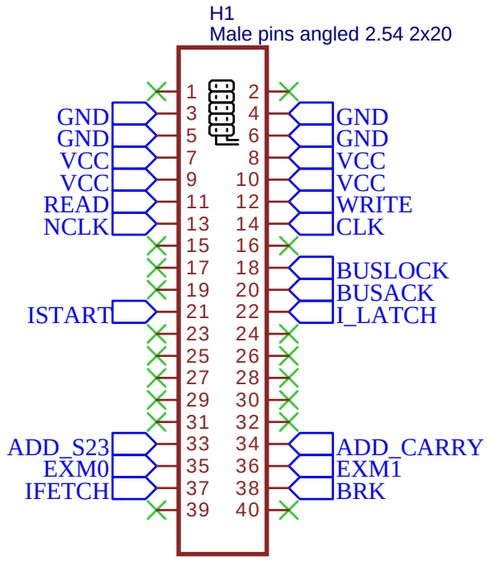

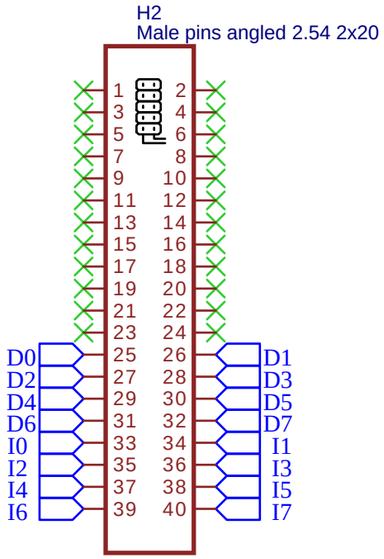

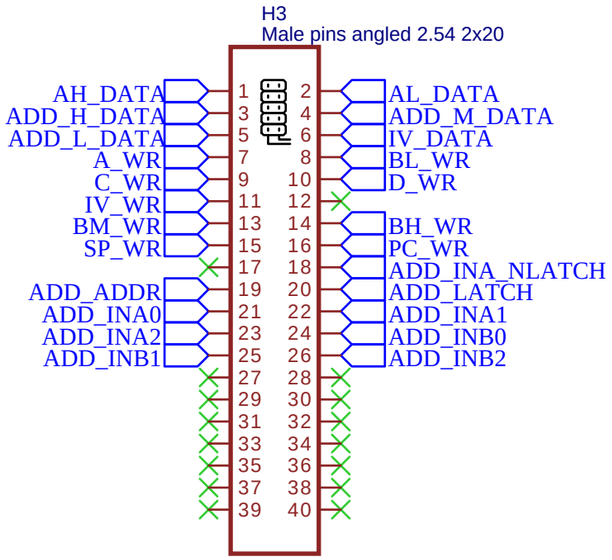

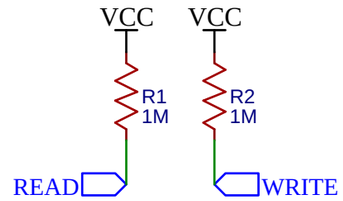

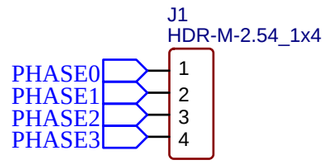

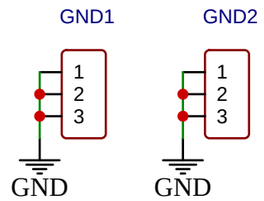

TITLE: Instruction decoder	REV: 1.0
Company: JMC Lab Experience	Sheet: 1/2
Date: 2022-01-09 Drawn By: JMC	

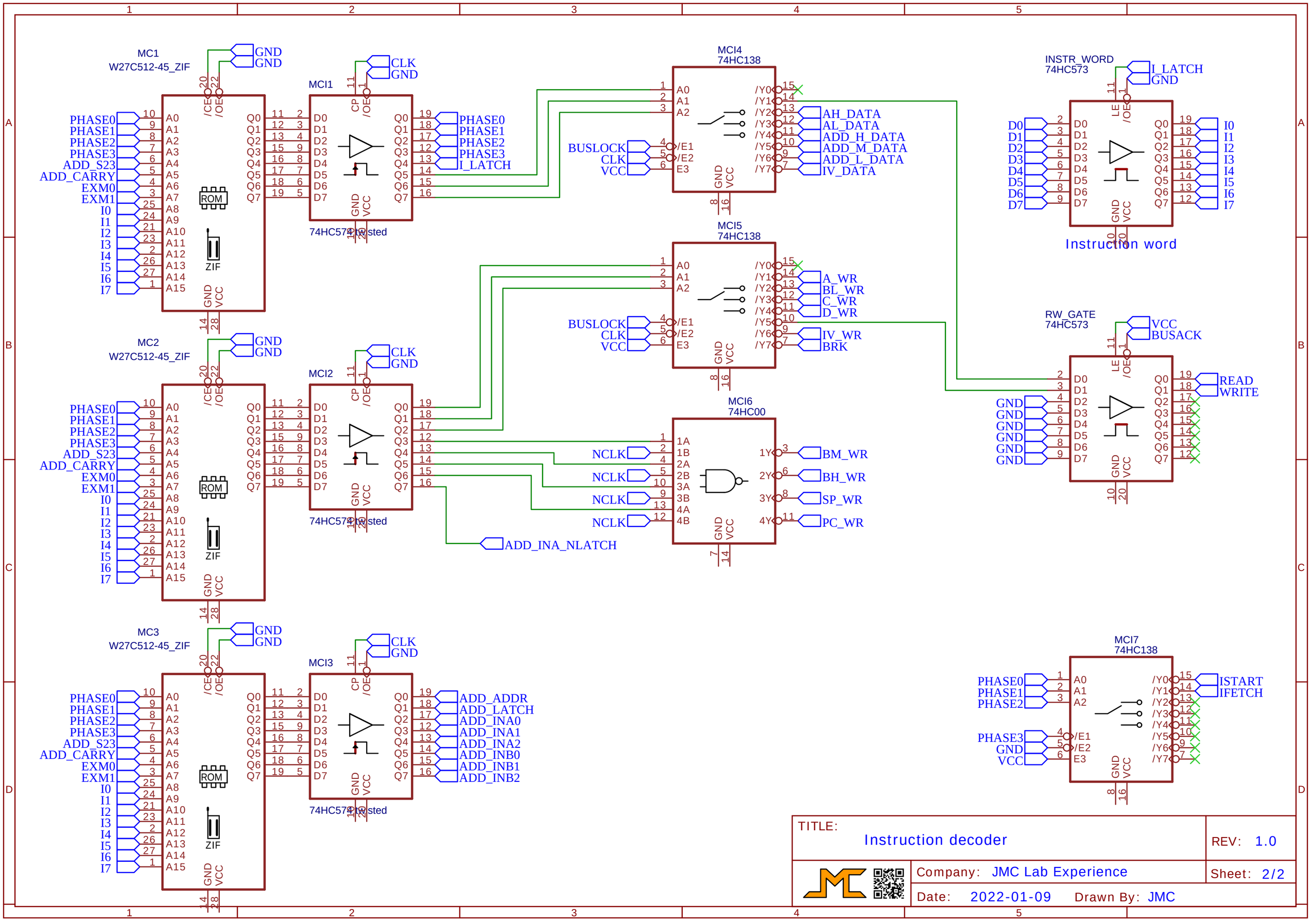

TITLE: Instruction decoder

REV: 1.0

Company: JMC Lab Experience

Sheet: 2/2

Date: 2022-01-09

Drawn By: JMC